Silicon PIN Photodiode

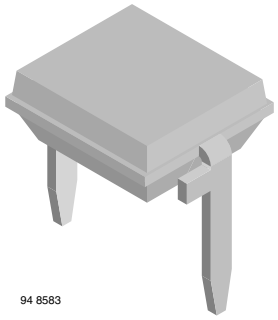

FEATURES

- Package type: leaded
- Package form: top view
- Dimensions (L x W x H in mm): 5.4 x 4.3 x 3.2
- Radiant sensitive area (in mm^2): 7.5
- High photo sensitivity
- High radiant sensitivity
- Suitable for visible and near infrared radiation
- Fast response times
- Angle of half sensitivity: φ = ± 65°
- Compliant to RoHS Directive 2002/95/EC and in accordance to WEEE 2002/96/EC

Pb-free

e3

RoHS COMPLIANT

GREEN (5-2008)**

Note

** Please see document “Vishay Material Category Policy”: www.vishay.com/doc?99902

DESCRIPTION

BPW34 is a PIN photodiode with high speed and high radiant sensitivity in miniature, flat, top view, clear plastic package. It is sensitive to visible and near infrared radiation. BPW34S is packed in tubes, specifications like BPW34.

APPLICATIONS

- High speed photo detector

PRODUCT SUMMARY			
COMPONENT	I_{ra} (µA)	φ (deg)	$\lambda_{0.1}$ (nm)
BPW34	50	± 65	430 to 1100
BPW34S	50	± 65	430 to 1100

Note

- Test condition see table “Basic Characteristics”

ORDERING INFORMATION			
ORDERING CODE	PACKAGING	REMARKS	PACKAGE FORM
BPW34	Bulk	MOQ: 3000 pcs, 3000 pcs/bulk	Top view
BPW34S	Tube	MOQ: 1800 pcs, 45 pcs/tube	Top view

Note

- MOQ: minimum order quantity

ABSOLUTE MAXIMUM RATINGS (T_{amb} = 25 °C, unless otherwise specified)				
PARAMETER	TEST CONDITION	SYMBOL	VALUE	UNIT
Reverse voltage		V_R	60	V
Power dissipation	$T_{amb} \leq 25$ °C	P_V	215	mW
Junction temperature		T_j	100	°C
Operating temperature range		T_{amb}	- 40 to + 100	°C
Storage temperature range		T_{stg}	- 40 to + 100	°C
Soldering temperature	t ≤ 3 s	T_{sd}	260	°C
Thermal resistance junction/ambient	Connected with Cu wire, 0.14 mm^2	R_{thJA}	350	K/W

For technical questions, contact: detectortechsupport@vishay.com

THIS DOCUMENT IS SUBJECT TO CHANGE WITHOUT NOTICE. THE PRODUCTS DESCRIBED HEREIN AND THIS DOCUMENT ARE SUBJECT TO SPECIFIC DISCLAIMERS, SET FORTH AT www.vishay.com/doc?91000

BASIC CHARACTERISTICS (T_{amb} = 25 °C, unless otherwise specified)						
PARAMETER	**TEST CONDITION**	**SYMBOL**	**MIN.**	**TYP.**	**MAX.**	**UNIT**
Breakdown voltage	I_R = 100 µA, E = 0	$V_{(BR)}$	60			V
Reverse dark current	V_R = 10 V, E = 0	I_{ro}		2	30	nA
Diode capacitance	V_R = 0 V, f = 1 MHz, E = 0	C_D		70		pF
	V_R = 3 V, f = 1 MHz, E = 0	C_D		25	40	pF
Open circuit voltage	E_e = 1 mW/cm², λ = 950 nm	V_o		350		mV
Temperature coefficient of V_o	E_e = 1 mW/cm², λ = 950 nm	TK_{Vo}		- 2.6		mV/K
Short circuit current	E_A = 1 klx	I_k		70		µA
	E_e = 1 mW/cm², λ = 950 nm	I_k		47		µA
Temperature coefficient of I_k	E_e = 1 mW/cm², λ = 950 nm	TK_{Ik}		0.1		%/K
Reverse light current	E_A = 1 klx, V_R = 5 V	I_{ra}		75		µA
	E_e = 1 mW/cm², λ = 950 nm, V_R = 5 V	I_{ra}	40	50		µA
Angle of half sensitivity		φ		± 65		deg
Wavelength of peak sensitivity		λ_p		900		nm
Range of spectral bandwidth		$\lambda_{0.1}$		430 to 1100		nm
Noise equivalent power	V_R = 10 V, λ = 950 nm	NEP		4×10^{-14}		W/√Hz
Rise time	V_R = 10 V, R_L = 1 kΩ, λ = 820 nm	t_r		100		ns
Fall time	V_R = 10 V, R_L = 1 kΩ, λ = 820 nm	t_f		100		ns

BASIC CHARACTERISTICS (T_{amb} = 25 °C, unless otherwise specified)

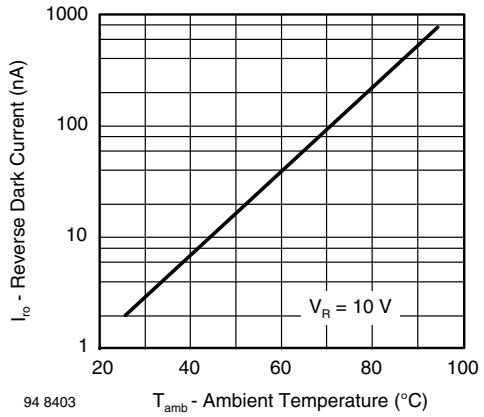

Fig. 1 - Reverse Dark Current vs. Ambient Temperature

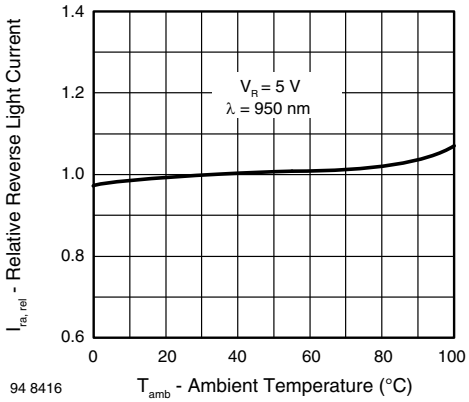

Fig. 2 - Relative Reverse Light Current vs. Ambient Temperature

For technical questions, contact: detectortechsupport@vishay.com

THIS DOCUMENT IS SUBJECT TO CHANGE WITHOUT NOTICE. THE PRODUCTS DESCRIBED HEREIN AND THIS DOCUMENT ARE SUBJECT TO SPECIFIC DISCLAIMERS, SET FORTH AT www.vishay.com/doc?91000

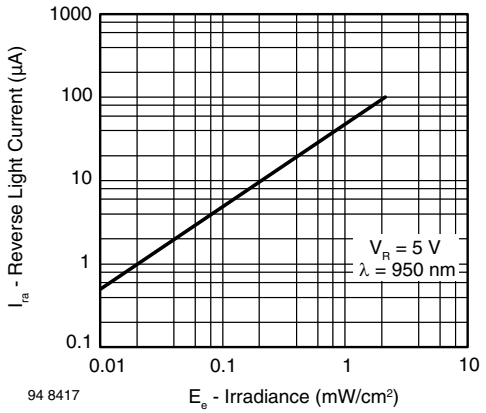

Fig. 3 - Reverse Light Current vs. Irradiance

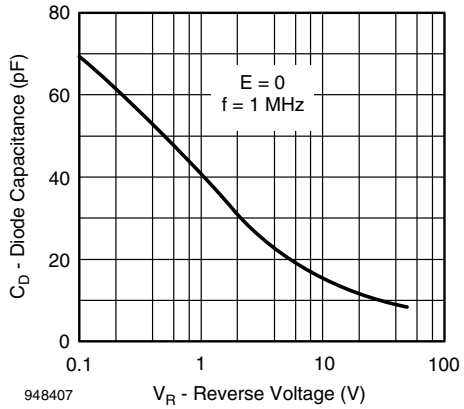

Fig. 6 - Diode Capacitance vs. Reverse Voltage

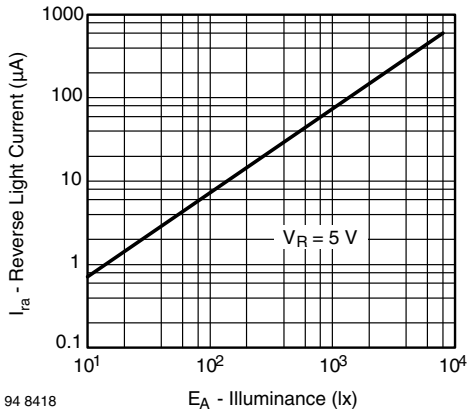

Fig. 4 - Reverse Light Current vs. Illuminance

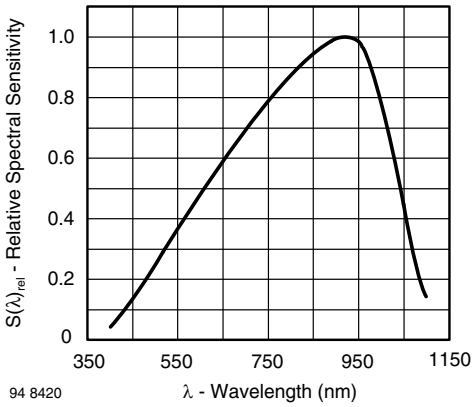

Fig. 7 - Relative Spectral Sensitivity vs. Wavelength

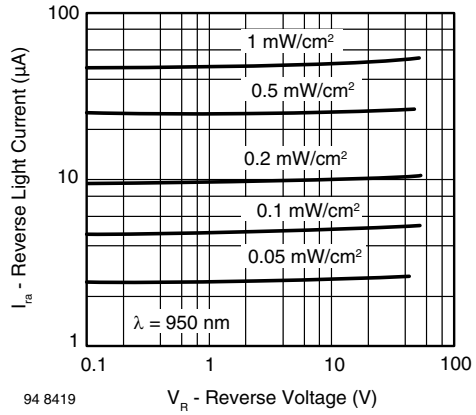

Fig. 5 - Reverse Light Current vs. Reverse Voltage

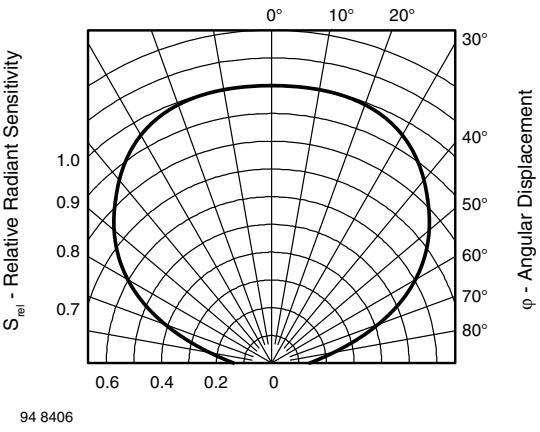

Fig. 8 - Relative Radiant Sensitivity vs. Angular Displacement

For technical questions, contact: detectortechsupport@vishay.com
THIS DOCUMENT IS SUBJECT TO CHANGE WITHOUT NOTICE. THE PRODUCTS DESCRIBED HEREIN AND THIS DOCUMENT ARE SUBJECT TO SPECIFIC DISCLAIMERS, SET FORTH AT www.vishay.com/doc?91000

PACKAGE DIMENSIONS in millimeters

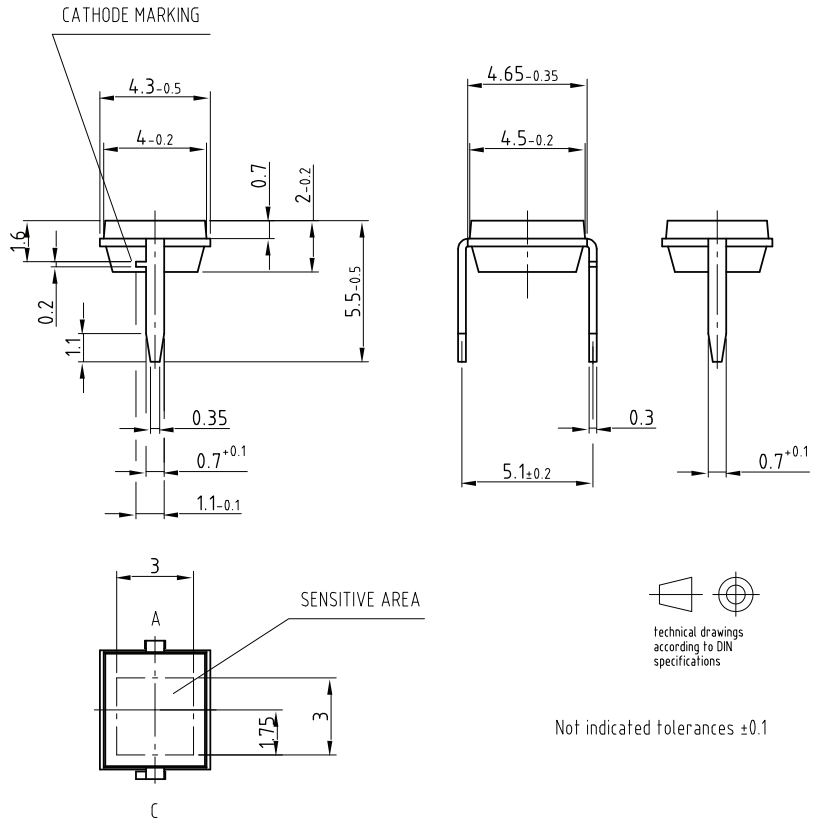

Drawing-No.: 6.544-5315.01-4
Issue: 1; 19.10.07
96 12186

TUBE PACKAGING DIMENSIONS in millimeters

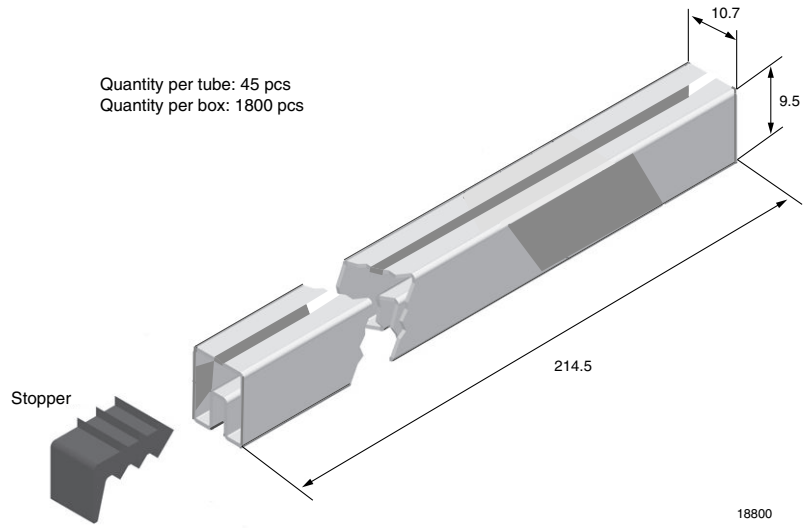

Fig. 9 - Drawing Proportions not scaled

For technical questions, contact: detectortechsupport@vishay.com

THIS DOCUMENT IS SUBJECT TO CHANGE WITHOUT NOTICE. THE PRODUCTS DESCRIBED HEREIN AND THIS DOCUMENT ARE SUBJECT TO SPECIFIC DISCLAIMERS, SET FORTH AT www.vishay.com/doc?91000

Disclaimer

ALL PRODUCT, PRODUCT SPECIFICATIONS AND DATA ARE SUBJECT TO CHANGE WITHOUT NOTICE TO IMPROVE RELIABILITY, FUNCTION OR DESIGN OR OTHERWISE.

Vishay Intertechnology, Inc., its affiliates, agents, and employees, and all persons acting on its or their behalf (collectively, “Vishay”), disclaim any and all liability for any errors, inaccuracies or incompleteness contained in any datasheet or in any other disclosure relating to any product.

Vishay makes no warranty, representation or guarantee regarding the suitability of the products for any particular purpose or the continuing production of any product. To the maximum extent permitted by applicable law, Vishay disclaims (i) any and all liability arising out of the application or use of any product, (ii) any and all liability, including without limitation special, consequential or incidental damages, and (iii) any and all implied warranties, including warranties of fitness for particular purpose, non-infringement and merchantability.

Statements regarding the suitability of products for certain types of applications are based on Vishay’s knowledge of typical requirements that are often placed on Vishay products in generic applications. Such statements are not binding statements about the suitability of products for a particular application. It is the customer’s responsibility to validate that a particular product with the properties described in the product specification is suitable for use in a particular application. Parameters provided in datasheets and / or specifications may vary in different applications and performance may vary over time. All operating parameters, including typical parameters, must be validated for each customer application by the customer’s technical experts. Product specifications do not expand or otherwise modify Vishay’s terms and conditions of purchase, including but not limited to the warranty expressed therein.

Except as expressly indicated in writing, Vishay products are not designed for use in medical, life-saving, or life-sustaining applications or for any other application in which the failure of the Vishay product could result in personal injury or death. Customers using or selling Vishay products not expressly indicated for use in such applications do so at their own risk. Please contact authorized Vishay personnel to obtain written terms and conditions regarding products designed for such applications.

No license, express or implied, by estoppel or otherwise, to any intellectual property rights is granted by this document or by any conduct of Vishay. Product names and markings noted herein may be trademarks of their respective owners.

© 2019 VISHAY INTERTECHNOLOGY, INC. ALL RIGHTS RESERVED